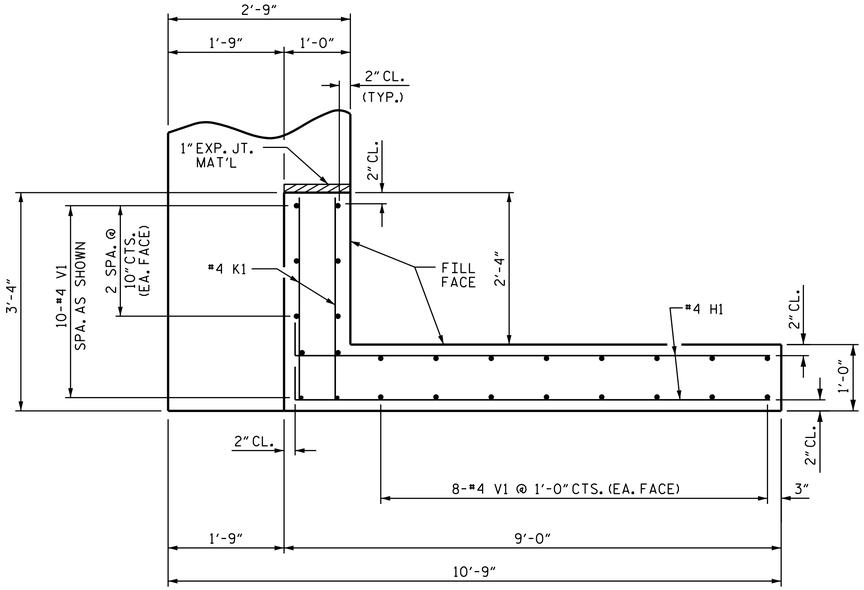


PLAN OF WING (W1)

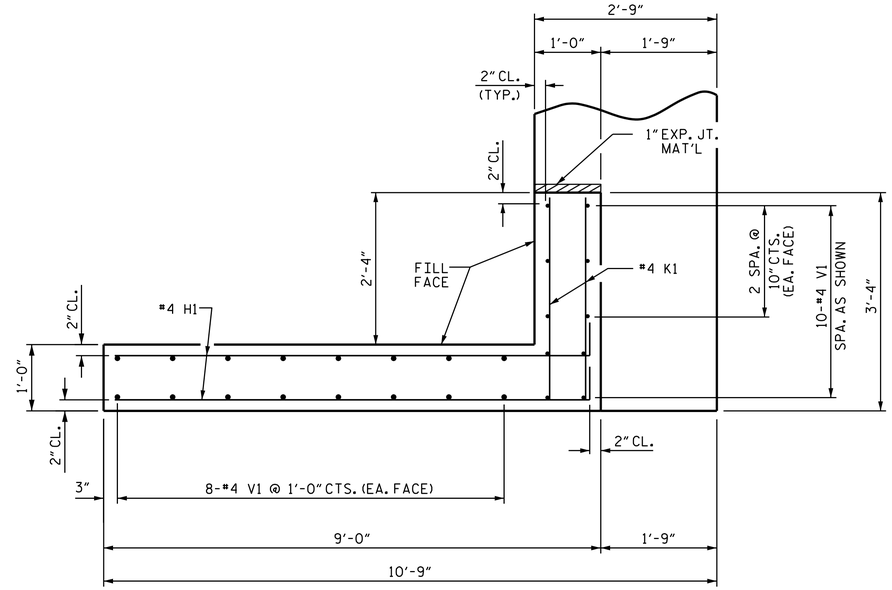


PLAN OF WING (W2)

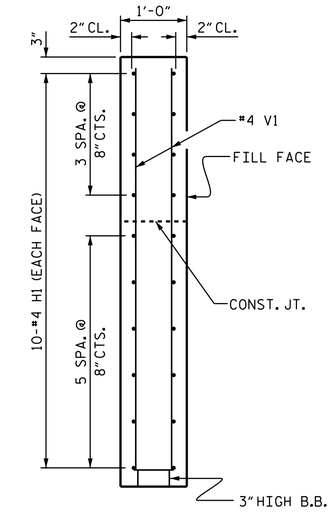


SECTION X-X

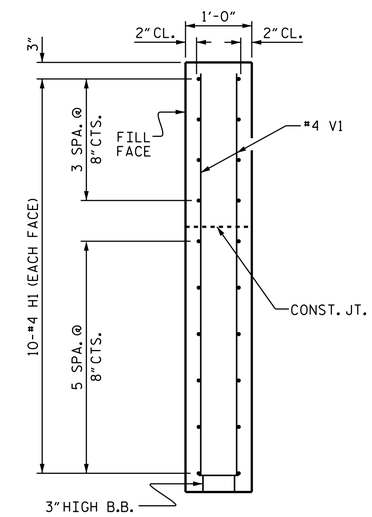


SECTION Y-Y

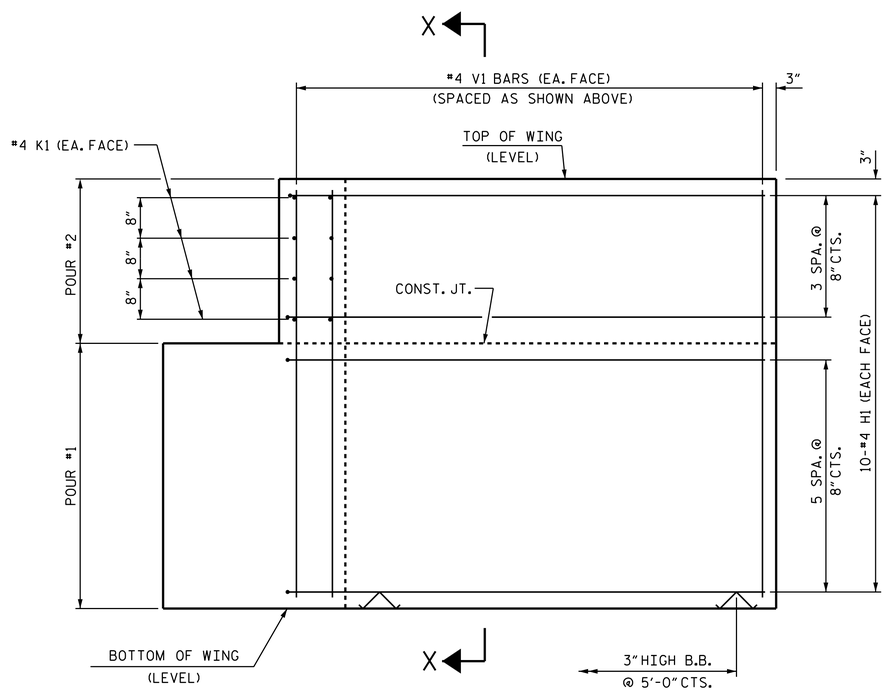


ELEVATION OF WING (W1)

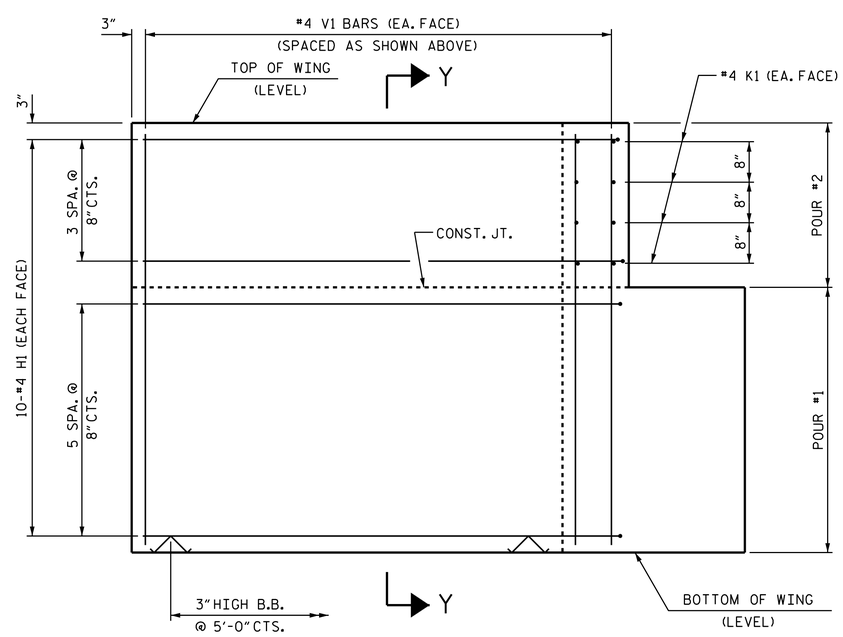


ELEVATION OF WING (W2)

WING DETAILS

PROJECT NO. BP1-R002

NORTHAMPTON COUNTY

STATION: 13+68.00 -L-

SHEET 3 OF 4

STATE OF NORTH CAROLINA
DEPARTMENT OF TRANSPORTATION
RALEIGH

SUBSTRUCTURE

# END BENT WING DETAILS

NORTH CAROLINA PROFESSIONAL SEAL 048992 ENGINEER ELIZABETH C. PHELPS

DocuSigned by: Elizabeth Phelps 8/10/2023
A304598A0627455...

| REVISIONS | | | | | | SHEET NO. |
|---|---|---|---|---|---|---|
| NO. | BY: | DATE: | NO. | BY: | DATE: | S-14 |
| 1 | | | 3 | | | TOTAL SHEETS |
| 2 | | | 4 | | | 19 |

DOCUMENT NOT CONSIDERED FINAL UNLESS ALL SIGNATURES COMPLETED

STD.NO.EB_33_90S4


vhb
VHB Engineering NC, P.C. (C-3705)
940 Main Campus Drive, Suite 500
Raleigh, NC 27606


DRAWN BY : E.C. PHELPS DATE : 08/2023
CHECKED BY : K.F. SMIACH DATE : 08/2023
DESIGN ENGINEER OF RECORD: E.C. PHELPS DATE : 08/2023

8/3/2023
\\vhb.com\gbl\proj\Raleigh\38973.02 NCDOT_Div1_Bridge 45\NCDOT\Structures\drawings\BP1-R002_SMU_EB03.dgn
ephelps

8/26/21