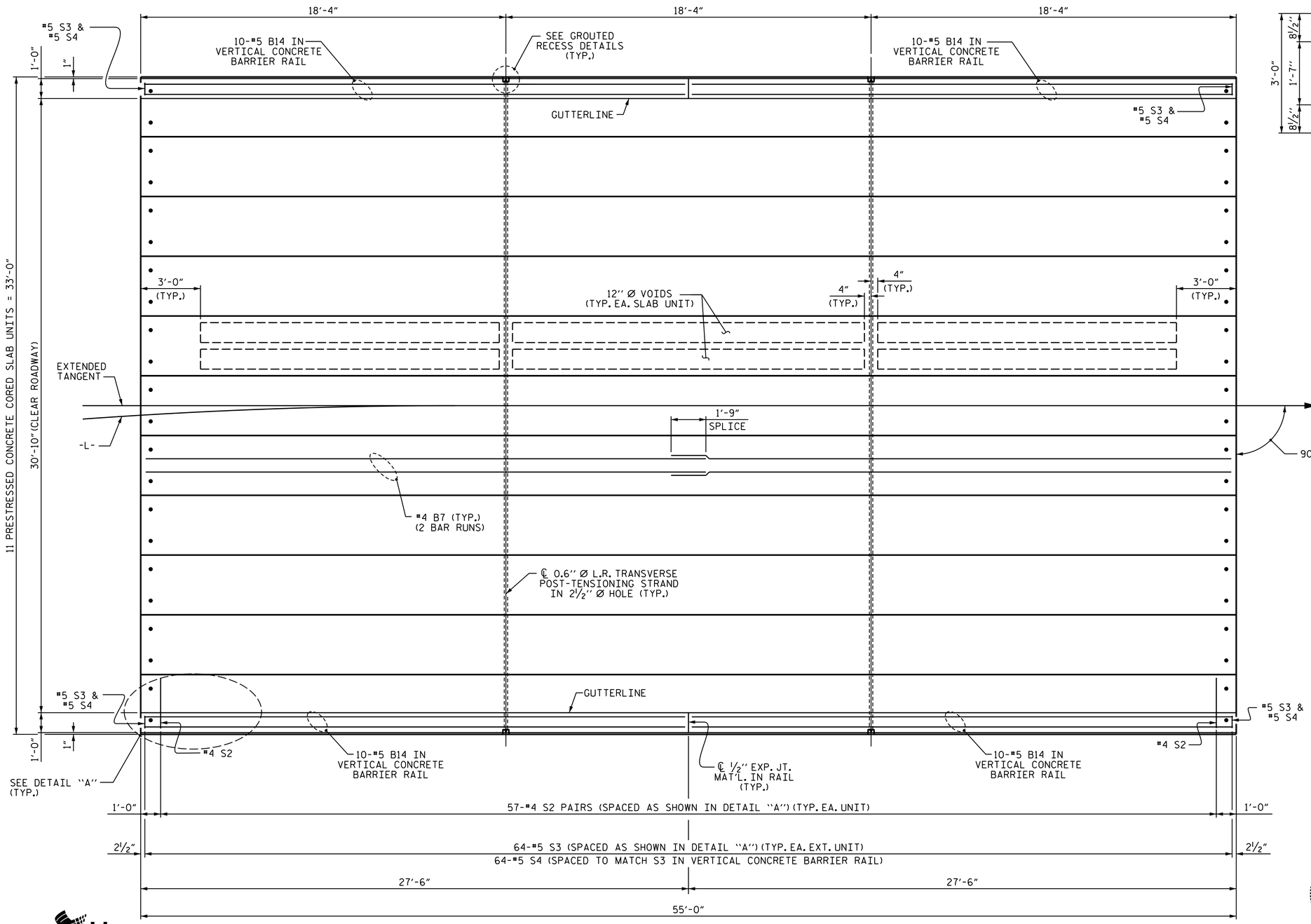

PLAN OF UNIT

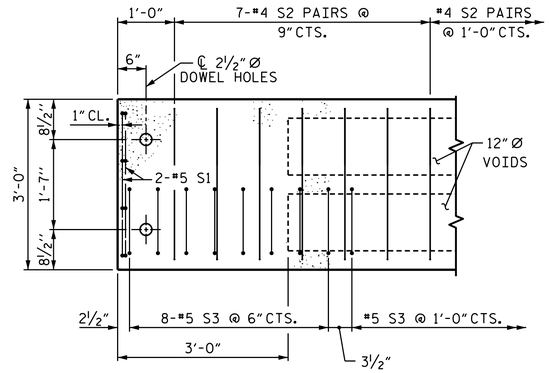

DETAIL "A"

(TYPICAL EACH END OF UNIT)
NOTE: EXTERIOR UNIT SHOWN - INTERIOR UNIT SIMILAR EXCEPT OMIT #5 S3 BARS.

PROJECT NO. BP1-R002
NORTHAMPTON COUNTY
STATION: 13+68.00 -L-

SHEET 2 OF 5

STATE OF NORTH CAROLINA
DEPARTMENT OF TRANSPORTATION
RALEIGH

SPAN A
PLAN OF 55' UNIT
30'-10" CLEAR ROADWAY
90° SKEW

NORTH CAROLINA PROFESSIONAL SEAL 048992 ENGINEER ELIZABETH C. PHELPS

DocuSigned by: Elizabeth Phelps 8/10/2023
A304598A0627455...

VHB Engineering NC, P.C. (C-3705)
940 Main Campus Drive, Suite 500
Raleigh, NC 27606

DRAWN BY : E.C. PHELPS DATE : 08/2023
CHECKED BY : K.F. SMIACH DATE : 08/2023
DESIGN ENGINEER OF RECORD: E.C. PHELPS DATE : 08/2023

DOCUMENT NOT CONSIDERED FINAL UNLESS ALL SIGNATURES COMPLETED

REVISIONS						SHEET NO.
NO.	BY:	DATE:	NO.	BY:	DATE:	S-7
1			3			TOTAL SHEETS
2			4			19

STD.NO.21"PCS_33_90S_55L

8/26/21

8/3/2023
\\vhb.com\gbl\proj\Raleigh\38973.02 NCDOT_Div1_Bridge 45\NCDOT\Structures\drawings\BP1-R002_SMU_PCG02.dgn
ephelps