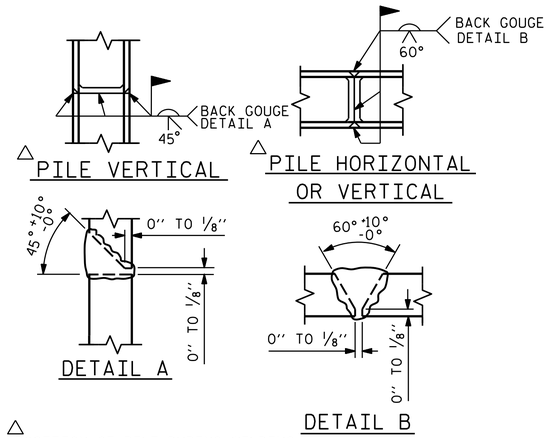

△ POSITION OF PILE DURING WELDING.

PILE SPLICE DETAILS

BAR TYPES

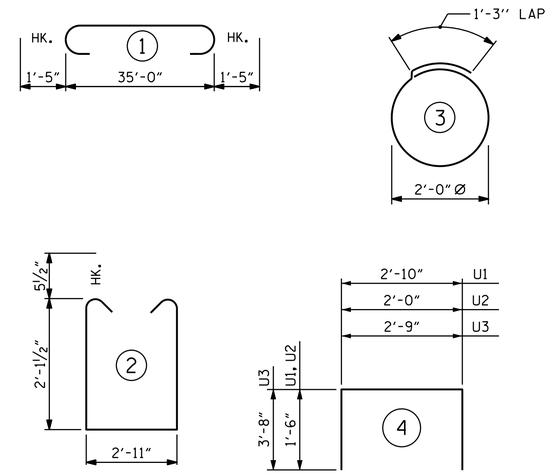

ALL BAR DIMENSIONS ARE OUT TO OUT.

BILL OF MATERIAL FOR ONE BENT

BAR	NO.	SIZE	TYPE	LENGTH	WEIGHT
B1	4	#10	1	37'-10"	651
B2	4	#10	STR	35'-2"	605
B3	4	#5	STR	35'-2"	147
B4	8	#4	STR	18'-10"	101
B5	9	#4	STR	2'-11"	18
D1	44	#6	STR	1'-6"	99
S1	39	#5	2	8'-1"	329
S2	16	#4	3	7'-7"	81
U1	4	#4	4	5'-10"	16
U2	6	#4	4	5'-0"	20
U3	2	#9	4	10'-1"	69

REINFORCING STEEL (FOR ONE BENT) 2136 LBS

CLASS A CONCRETE BREAKDOWN (FOR ONE BENT)

TOTAL CLASS A CONCRETE 10.7 C.Y.

HP 14 X 73 GALVANIZED STEEL PILES (FOR ONE BENT)

No. 8 LIN. FT. 600

PILE DRIVING EQUIPMENT SETUP FOR HP 14 X 73 GALVANIZED STEEL PILES (FOR ONE BENT)

NO: 8

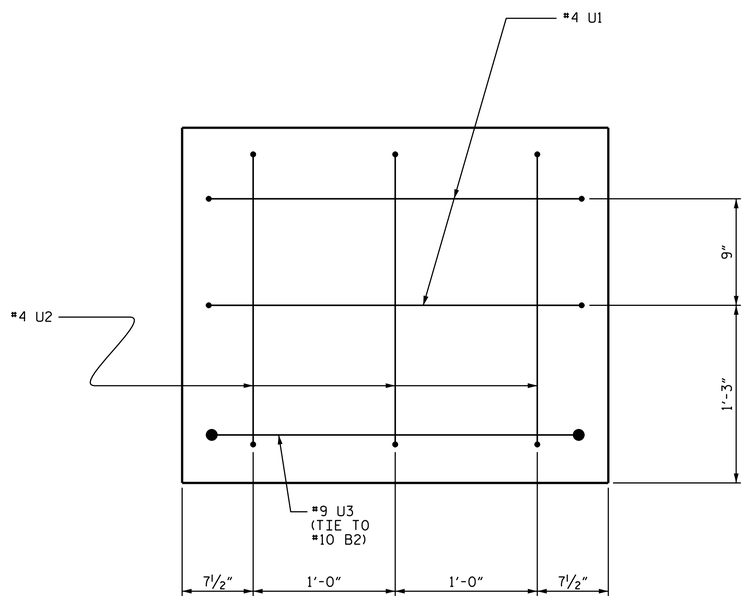

END OF CAP VIEW

(TYPICAL BOTH ENDS)

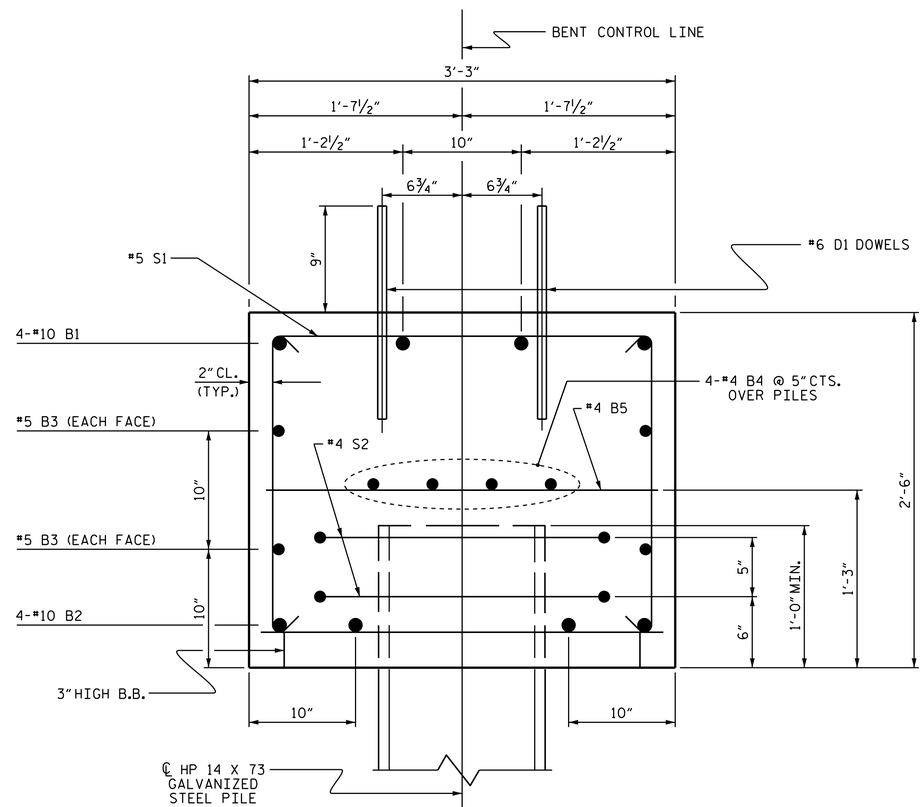

SECTION A-A

PROJECT NO. BP1-R002

NORTHAMPTON COUNTY

STATION: 13+68.00 -L-

SHEET 2 OF 2

STATE OF NORTH CAROLINA
DEPARTMENT OF TRANSPORTATION
RALEIGH

SUBSTRUCTURE

BENT No. 1

NORTH CAROLINA PROFESSIONAL SEAL 048992 ENGINEER ELIZABETH C. PHELPS

DocuSigned by: Elizabeth Phelps A304598A0627455... 8/10/2023

DOCUMENT NOT CONSIDERED FINAL UNLESS ALL SIGNATURES COMPLETED

REVISIONS						SHEET NO.
NO.	BY:	DATE:	NO.	BY:	DATE:	S-17
1			3			TOTAL SHEETS
2			4			19

vhb
VHB Engineering NC, P.C. (C-3705)
940 Main Campus Drive, Suite 500
Raleigh, NC 27606

DRAWN BY : E.C. PHELPS DATE : 08/2023
CHECKED BY : K.F. SMIACH DATE : 08/2023
DESIGN ENGINEER OF RECORD: E.C. PHELPS DATE : 08/2023

8/26/21

8/3/2023
\\vhb.com\gbl\proj\Raleigh\38973.02 NCDOT_Divi_Bridge 45\NCDOT\Structures\drawings\BP1-R002_SMU_BENT02.dgn
ephelps

STD.NO.14"HP_BT_33_90S_<60'