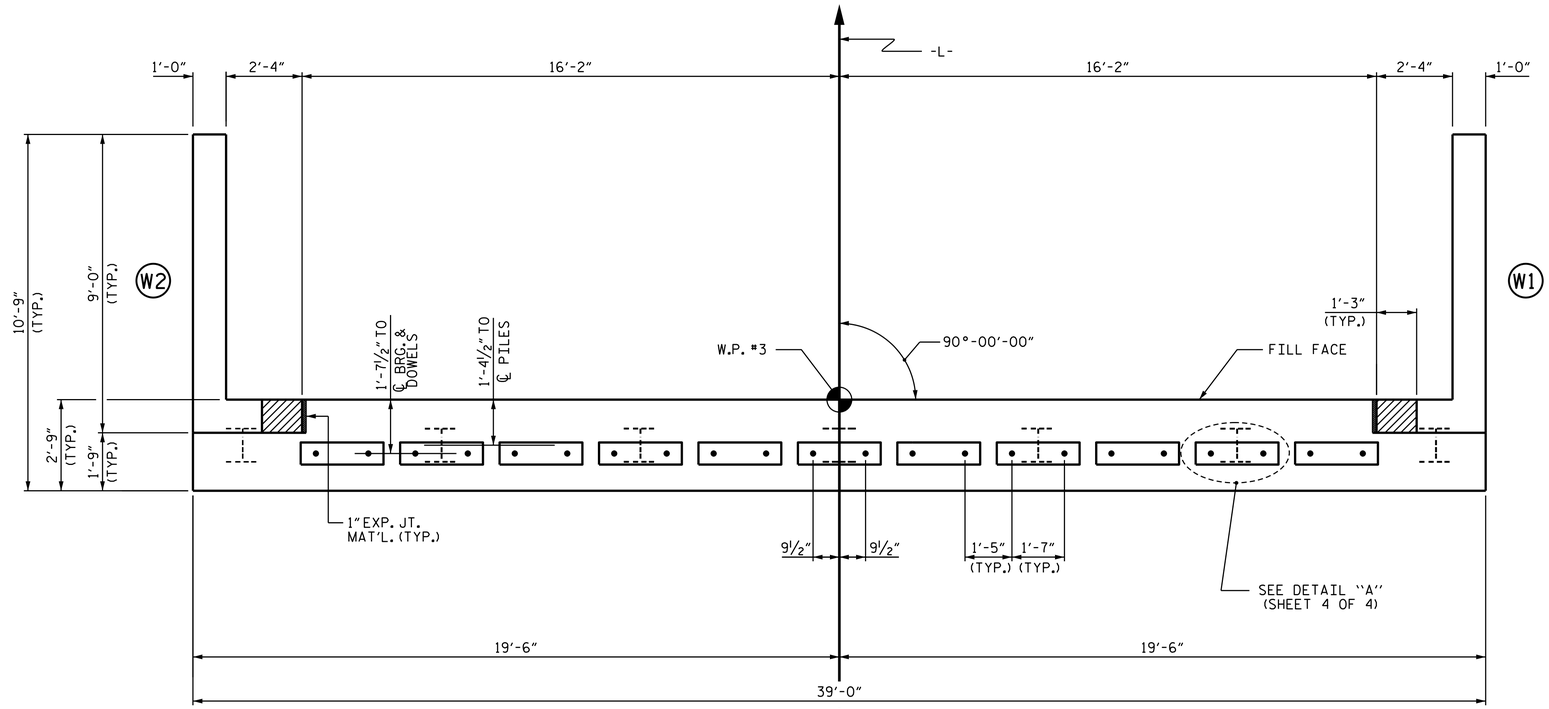

PLAN

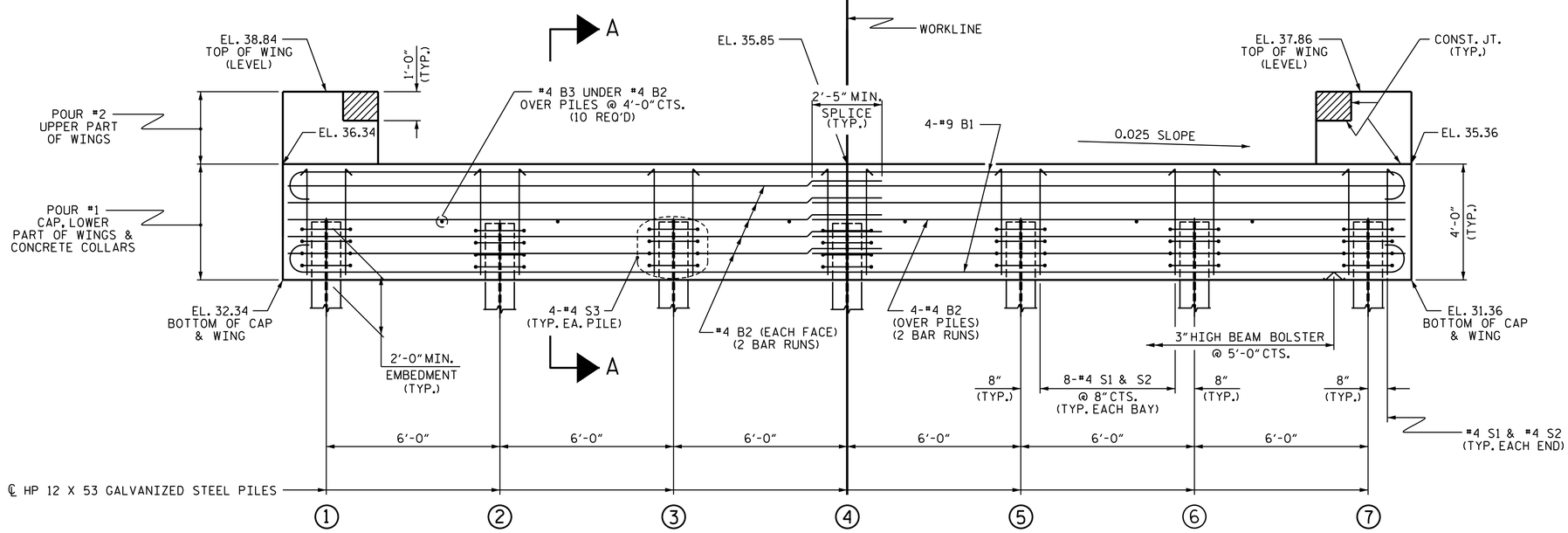

ELEVATION

WINGS NOT SHOWN FOR CLARITY.
FOR SECTION A-A, SEE SHEET 4 OF 4.

NOTES

STIRRUPS IN CAP MAY BE SHIFTED AS NECESSARY TO CLEAR DOWELS.

THE CONCRETE IN THE SHADED AREA OF THE WING SHALL BE POURED AFTER THE VERTICAL CONCRETE BARRIER RAIL IS CAST IF SLIP FORMING IS USED.

FOR PILE SPLICE DETAILS, SEE SHEET 4 OF 4.

FOR WING DETAILS, SEE SHEET 3 OF 4.

TOP OF PILE ELEVATIONS	
1	34.30
2	34.15
3	34.00
4	33.85
5	33.70
6	33.55
7	33.40

PROJECT NO. BP1-R002
NORTHAMPTON COUNTY
STATION: 13+68.00 -L-

SHEET 2 OF 4

STATE OF NORTH CAROLINA
DEPARTMENT OF TRANSPORTATION
RALEIGH

SUBSTRUCTURE

END BENT No. 2

NORTH CAROLINA PROFESSIONAL SEAL 048992 ENGINEER ELIZABETH C. PHELPS

DocuSigned by: Elizabeth Phelps A304598A0627455... 10/3/2023

VHB Engineering NC, P.C. (C-3705)
940 Main Campus Drive, Suite 500
Raleigh, NC 27606

DRAWN BY : E.C. PHELPS	DATE : 08/2023		
CHECKED BY : K.F. SMIACH	DATE : 08/2023		
DESIGN ENGINEER OF RECORD: E.C. PHELPS	DATE : 08/2023		

DOCUMENT NOT CONSIDERED FINAL UNLESS ALL SIGNATURES COMPLETED

REVISIONS						SHEET NO.
NO.	BY:	DATE:	NO.	BY:	DATE:	S-13
1			3			TOTAL SHEETS
2			4			19

STD.NO.EB_33_90S4